MTS Elettronica Srl

Via Bachelet 70/72
46047- Bancole di P.to M.no
MANTOVA-ITALIA
Tel.+390376-392608
Emal:info@multiservice-mn.it www.mtselettronica.it

COMPACT1-3MCH
ECOLINE

IGBT Single branch Rectifier

Summary

MTS Elettronica Srl VIA BACHELET 70/72 – 46047 – BANCOLE – MANTOVA
VAT : 01781600208 –TEL.0376 392608 – FAX 0376 385224
Email: info@multiservice-mn.it internet : www.mtselettronica.it

1 - Introduction

The following document describes the stabilized rectifier **COMPACT 1-3MCHECOLINE** series **SINGLE BRANCH** configuration characteristics. These new products are the result of a research & development activity, carried out by our Company, aimed to obtain the highest reliability and the best performance in the field of DC emergency power supplies, with special focus to all auxiliary service applications into the transformer substations.

2 – Operating principle

The rectifier operation mode is of SINGLE CONVERSION STAGE where a conversion from AC to DC source and subsequently a control of output V/I parameters by means of an electronic control process is performed.
The related layout is mainly constituted by:

- An isolation transformer at network frequency equipped with an electrostatic shield between primary and secondary
- A High frequency post-regulator with an IGBT STEP-DOWN configuration IGBT with PWM technology control (Figure A)
- EMI / RFI filters

Figure A
STEP-DOWN configuration with a high frequency control by PWM (Pulse Width Modulation)

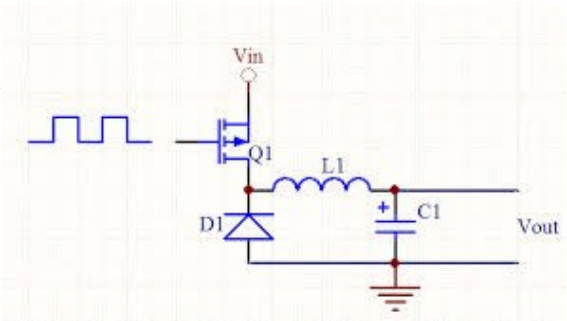

The presence of the network frequency isolation transformer at incoming provides the electrical isolation between input and output, allows to filter possible disturbances or anomalies present on the network and gives a high degree of reliability to the conversion system.
In presence of main power supply, the AC/DC conversion section will therefore have the task of providing energy to the load and the battery that result connected in parallel with each other. The battery will be able to deliver current to the services together with the rectifier in case of load demands exceeding the current limit of the rectifier itself and/or lack of primary network (blackout).

In case of lack of primary network, the output voltage to the feeders adapts to the battery power itself and the discharge takes place; when the minimum battery voltage is reached, it is then switched to a dedicated relay switch contact that remotely detects the event. When the main power supply restores, the system resumes its regular operation and begins the battery recharge cycle.
The rectifier is always fitted with a double current control (adjustable from 0 ÷ In) independently from the maximum total current available from the system and the charging current to the batteries; this current value will be adjusted to the most appropriate value for the type of battery installed.

MTS Elettronica Srl VIA BACHELET 70/72 – 46047 – BANCOLE – MANTOVA
VAT : 01781600208 –TEL.0376 392608 – FAX 0376 385224
Email: info@multiservice-mn.it internet : www.mtselettronica.it

3 – Input transformer

The power transformer is made with a core with first choice laminated steel sheets (the crystal oriented solution is optional) and with an electrostatic shield between primary and secondary. The shield causes the reduction of the input voltage to the more appropriate value for the conversion system operation and the network insulation (4kV). The transformer is made of class F (155°C) supports and isolators while the windings are in class H double insulation electrolytic copper (220°C). The electrostatic shield is ground connected between primary and secondary
The transformers are compliant with CEI EN 61558-2-4 dossier 4971 CEI 96-7 classification.

4 – IGBT

It is the power switching element with minimum Vces of 1200V, Ic = 100Amp and consequently Icrm (1mS) of 150Amp.
It has current automatic limitation ability in case of short circuit equal to 6 In (1mS). The base plate is preferably copper insulated.

5 - Batteries

The batteries will be inside the rectifier, or in a separate cabinet complete with adequate protection made with fuses. Stationary lead-free batteries of hermetic type will be used without maintenance.

MTS Elettronica Srl VIA BACHELET 70/72 – 46047 – BANCOLE – MANTOVA
VAT : 01781600208 –TEL.0376 392608 – FAX 0376 385224
Email: info@multiservice-mn.it internet : www.mtselettronica.it

6 – HMI (Human Machine Interface)

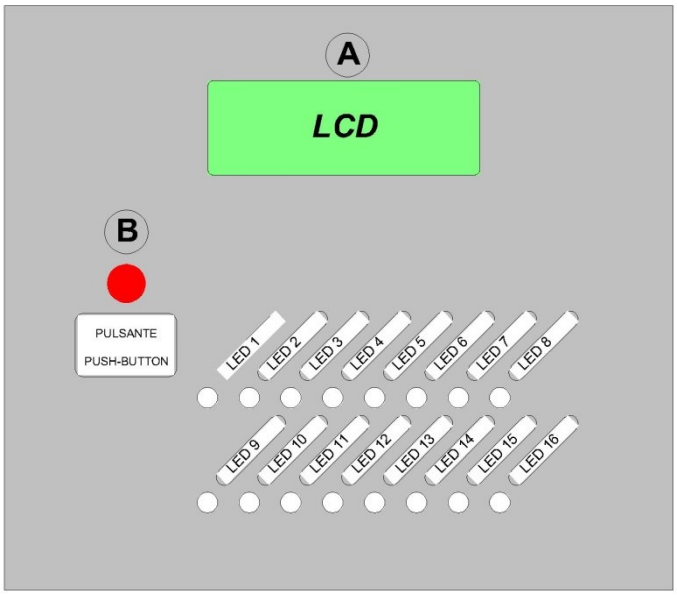

Rif.A

Picture of panel of measuring and alarms

We reserve the right to make changes without notice

The system of man / machine interface and 'consists of an LCD display, a blue background and white characters complete with backlighting for optimal viewing even in dimly lit environments, LED and STATE MESSAGE , audible alarm silenced.

Multifunctions Button (rif.B) to following operation:
Silence acustic alarms
Reset alarms

LED indicators to the following operating statuses:
SYSTEM OK (green)
SYSTEM FAILURE (reed)

States message (on 2° line LCD):
RECTIFIER ON
OVERLOAD
VOUT.RECT.MAX.
BATTERY MODE
LOW VOLT.BATT.
END VOLT.BATT.
DC TO EARTH POS.
DC TO EARTH NEG.
TEST BATT ON (with option)
TEST BATT FAULT (with option))

In the section LCD (rif.A) show :
Vo= Output voltage
Io= Output current

MTS Elettronica Srl VIA BACHELET 70/72 – 46047 – BANCOLE – MANTOVA
VAT : 01781600208 –TEL.0376 392608 – FAX 0376 385224
Email: info@multiservice-mn.it internet : www.mtselettronica.it

7 –Wired alarms

There is a standard relay board with SPDT type contacts (5Amp / 250Vac) placed on the removable terminals of the board for the following statuses:

AC power supply failure(relay powered normally)

Cumulative failure (relay powered normally ; sum of all alarm states)

Low voltage batteries

8 – Charging curves

8.1 Charging curve IU type according to DIN41773 – standard function

This function is consisting by: Phase 1: constant current and voltage increasing

Phase 2: current decreasing and constant voltage

When the charging current is below a predefined value, the battery is charged and the cycle is completed. In this situation, the output value will be equal to the floating one that is the minimum one necessary to the correct load maintenance into the accumulator.

Constant voltage charging characteristics
(Load/Current/voltage)
Loading time (hours)

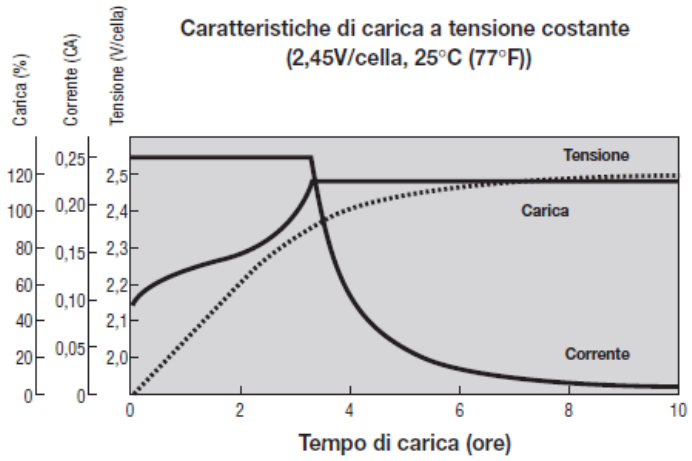

MTS Elettronica Srl VIA BACHELET 70/72 – 46047 – BANCOLE – MANTOVA
VAT : 01781600208 –TEL.0376 392608 – FAX 0376 385224
Email: info@multiservice-mn.it internet : www.mtselettronica.it

10 – Battery end discharging power contactor – Optional function

This feature automatically performs the detachment of the batteries when reaching the END DISCHARGE set point value. This function is very important during a blackout in order to avoid an accumulator deep discharge that could damage it in an irreversible way. The detachment is made by a power RELAY in series with the battery; the reconnection to the accumulator system is automatic once the AC/DC section restores its standard operation

11 – Battery Test – Optional function

This function provides an additional reliability step to the system

11.1 – Operation mode

When the request of Batteries Test starts, the section AC / DC will change its output voltage by lowering it to a safe value thereby forcing the rechargeable batteries to supply power to the load. At this point, the algorithm in the microprocessor will begin to monitor the behaviour of the battery discharge curve and if the values are outside the set point values, the TEST BATT.FAULT alarm triggers. At the same time, the AC/DC section will return to the FLOATING CHARGE value.

The presence of this function is very important in preventing anomalies of the BATTERY circuit that on the contrary would be detected only during programmed maintenance operations or in case of blackouts resulting in load loss.

Another very important aspect of the BATTERY TEST consists in the reducing of PLATES sulphation phenomenon into the accumulators; this event occurs when the battery is left in the buffer charge for a long time without being used and leads to an exponential increase of the Internal Resistance value (Ri). At this point, more the Re increases less the battery will be able to flow current by placing the load at risk. Thanks to the performing of a periodical AUTOMATIC TEST BATTERY procedure, into the accumulator the exchange of ions between the positive plates toward the negative ones is activated drastically reducing the sulphation phenomenon keeping the battery safe.

The functionality is available as a standard in a double mode:

- **Automatic:** the system performs the battery circuit every 30 days with a duration of 60 sec. During the test, all the electric circuit section involved with the battery is checked also including the protection devices (fuses or automatic circuit breaker), the connection cables (thus also interconnection cables among all monoblocks), any end of charge swtich (optional).
- **Manual:** it is possible to start TEST BATT procedure pushing the dedicated button available

12 – DC Polarity Sensor to Ground

There is a fixed threshold sensor (approx. 15mA, referring to the system's output terminals) which detects possible insulation losses of the output poles and batteries in the system. This sensor is NOT assimilated to an ISOLATION CONTROL instrument, but is provided to give an initial indication of any anomaly. The circuit detects the insulation loss of the POSITIVE pole or the NEGATIVE pole differentially

MTS Elettronica Srl VIA BACHELET 70/72 – 46047 – BANCOLE – MANTOVA
VAT : 01781600208 –TEL.0376 392608 – FAX 0376 385224
Email: info@multiservice-mn.it internet : www.mtselettronica.it

13– Cabinet

COMPACT 1-3MCHECOLINE systems are made of floor steel structures including:

- **Floor fixing plate**

13 – Operating devices

COMPACT 1-3MCHECOLINE systems include as a standard:

- **VAC input : MCB – 10kA**
- **Output: clamps**
- **Batteries: Fuses** (internal fuse protection is provided with separate battery cabinet)

14 – Electrical/Electronic protection

COMPACT 1-3MCHECOLINE systems include, as a standard:

- Circuit for insertion current reduction (pre-charge)
- Electronically controlled ventilation proportional to current output
- Maximum output voltage rectifier
- Minimum rectifier output voltage
- Overtemperature IGBT heatsink
- Maximum output current electronic limitation of STEP-DOWN converter
- Output short circuit current electronic limitation of STEP-DOWN converter
- Maximum battery charging current electronic limitation STEP-DOWN converter

16 – Wiring - cable types - cross sections and colours

AC-DC power cables = FS17 CPR Cca-s3,d1,a3 (cross-section according to power)
Signalling and control cables = FS17 CPR Cca-s3,d1,a3 (cross section 1mmq)
Signalling and control cables = FRO-HP CPR Cca-s3,d1,a3
FLAT CABLE = Flame Classification FT1,FT2
Data transmission cables = RJ45 cable - CAT5 FTP

Standard Colours Used (ref. CEI EN 60204 - 1)
AC Phase = Black
AC Neutral = Blue
AC Auxiliary = Red
DC Auxiliary = Grey
Outward Wired Alarms = Orange

MTS Elettronica Srl VIA BACHELET 70/72 – 46047 – BANCOLE – MANTOVA
VAT : 01781600208 –TEL.0376 392608 – FAX 0376 385224
Email: info@multiservice-mn.it internet : www.mtselettronica.it

17 – Tests and trials

The system will be tested and calibrated internally and certificates will be issued.

As a minimum, the following tests will be carried out:

- Visual inspection
- Functional check
- Rigidity and insulation test
- Instrument calibration check
- Operational testing to verify compliance with contractual stability and performance values
- Functional test at rated current
- Battery charging current tests

Internal acceptance tests are also carried out on components and/or materials arriving for the order.

Documentation

The entire order will be subject to quality control and quality procedures as per ISO9001 standard.

Included in the scope of supply are all documents necessary and/or required for commissioning and operation such as:

- Contract documents
- Test bulletins
- Certificates of conformity
- Single line diagrams
- Electrical diagrams
- Mechanical layouts
- Instruction manuals
- Start-up procedures

MTS Elettronica Srl VIA BACHELET 70/72 – 46047 – BANCOLE – MANTOVA
VAT : 01781600208 –TEL.0376 392608 – FAX 0376 385224
Email: info@multiservice-mn.it internet : www.mtselettronica.it

15 – Main technical characteristics

ELECTRICAL DATA		
Input voltage (Vac)	230 +/- 10% 2 wires	400 +/- 10% 3 wires
Input frequency	50 ÷ 60Hz +/-7%	
Input short circuit current	≤ 15KA RMS	With nominal VAC,IEC standard
Input current distortion	≤ 27	With nominal load (THD%)
Input power factor	≥ 0.80	With nominal voltage, 100% load
Typical conversion efficiency	≥ 0.9	With nominal voltage, 100% load
Output nominal voltage (Vdc)	24 ÷ 48 ÷110	
Output current (Amp)- main 1Ph **Output current (Amp)- main3Ph**	10 ÷ 60 Amp 10 ÷ 60 Amp	
- Floating charge	2,27V/cell for VRLA battery type (adjustable by trimmer)	
Output voltage stability	1%	
Output ripple –RMS	0.5 - 1%	
Overload	2In *5mS	Without batteries
ENVIRONMENTAL DATA		
Noise level	<60	(according to EN50091) - dB
EMI	EN 61000-6-2 EN 61000-6-4	
Rated temperature (°C)	-10….+40	
Store temperature (°C)	-20….+70	
Relative humidity (no condensation)	<95%	
Ventilation	Forced electronically controlled proportional to current output	
Altitude (mt above sea level)	< 2000 (derating according EN62040-3)	
MECHANICAL DATA		
External protection degree	IP30 (ref.IEC 60529)	
Colour	RAL 7035 – standard	
Dimension (l*w*h) mm	600 x 650 x1600	
IN/OUT cable connection	Front – from below	
Transportation	Base for movement with carts	
Installation	Maintain 30 cm distance from the walls with respect to the roof Air entry from front / bottom - out from side roof	
Accessibility	Front	

MTS Elettronica Srl VIA BACHELET 70/72 – 46047 – BANCOLE – MANTOVA
VAT : 01781600208 –TEL.0376 392608 – FAX 0376 385224
Email: info@multiservice-mn.it internet : www.mtselettronica.it

16 – Reference standards

Rectifier basic standard	:	EN IEC 60146
EMC standard	:	EN IEC 61000-6-2 EN IEC 61000-6-4
Power transformers	:	EN IEC 61558-2-6
Low voltage switchgear	:	CEI EN 61439-1-2 CEI EN 60947-2
Cables	:	CEI 20-22 (IEC 60332-3 where applicable) CEI 20-38 CEI 20-45
Cables color	:	CEI EN 60204-1
Cables Alphan.Identif.	:	CEI EN 60445:2018-03
Color Alphan.Identif.	:	CEI EN 60445:2018-03
Protection degree	:	IEC 60529
Mechanical	:	CEI EN 61439-1
Protection devices	:	IEC 60127-1
Contactor	:	IEC 60947-4-1
DC UPS (performance, ruoutine test, requirements)	:	IEC 62040-5-3

Altre/other :

REGULATION EMC 2014 /30/UE
REGULATION LOW TENSION 2014 /35/UE

MTS Elettronica Srl VIA BACHELET 70/72 – 46047 – BANCOLE – MANTOVA
VAT : 01781600208 –TEL.0376 392608 – FAX 0376 385224
Email: info@multiservice-mn.it internet : www.mtselettronica.it

17 – General single-line diagram

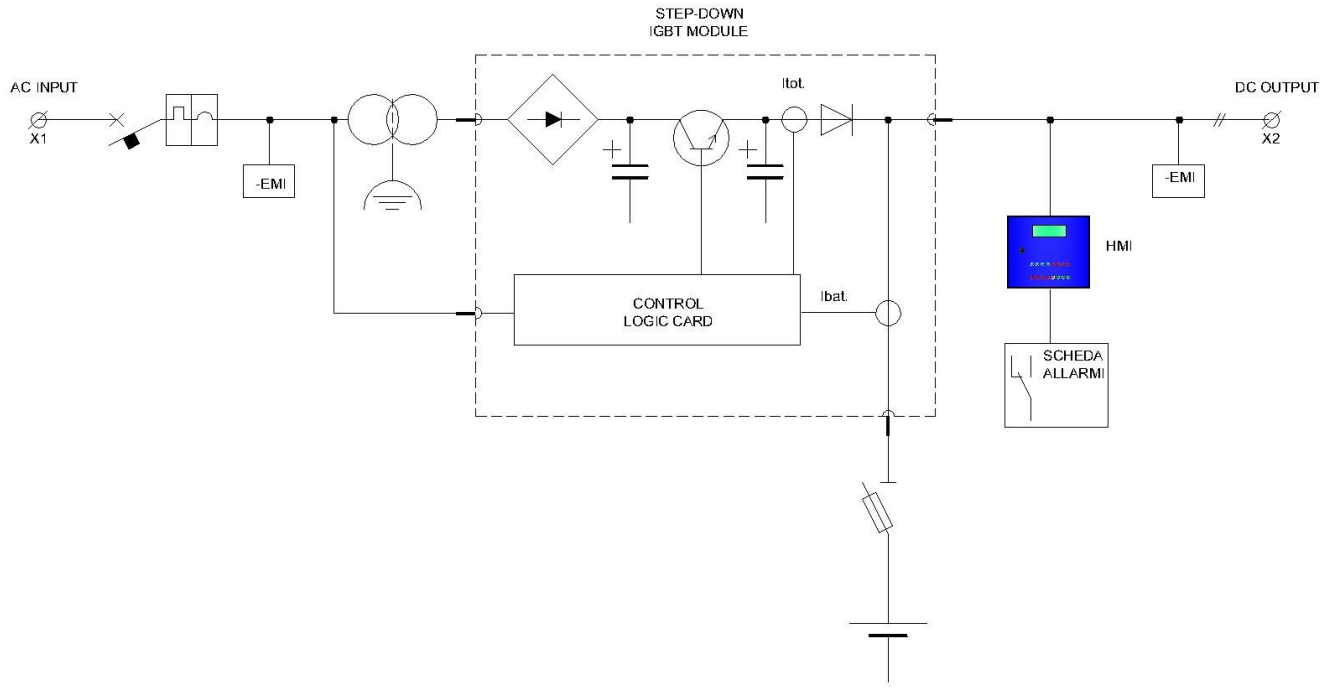

MTS Elettronica Srl VIA BACHELET 70/72 – 46047 – BANCOLE – MANTOVA
VAT : 01781600208 –TEL.0376 392608 – FAX 0376 385224
Email: info@multiservice-mn.it internet : www.mtselettronica.it

18 – Summary of available options

Pos.	Description
1	MCB output ÷ batteries
2	END DISCHARGE BATTERIES power contactor
3	Accessories for Pos.1
4	Batteries Reverse Polarity Control Unit (BRPCU)
5	Emergency Power Off
6	uP board for AUTOM./MANUAL BATTERY TEST functions

MTS Elettronica Srl VIA BACHELET 70/72 – 46047 – BANCOLE – MANTOVA
VAT : 01781600208 –TEL.0376 392608 – FAX 0376 385224
Email: info@multiservice-mn.it internet : www.mtselettronica.it